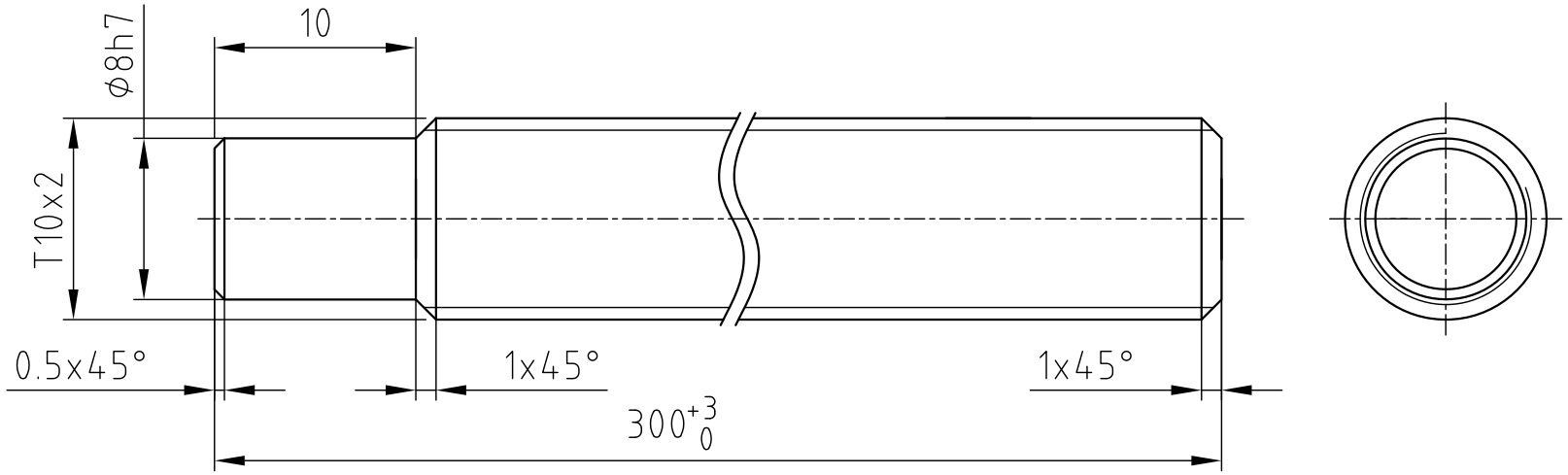

General tolerances ISO 2768-m	Work piese edge ISO 13715	(Surface specification)		Scales: 2:1	Weight:
				Material codes for steels: 1.4401	

	Datum	Name
Des.	29.06.11	J.W.
Appr.	29.06.11	S.R.
Norm		

THREADED-SPINDLE

ZST10-2-300-1

Blade

Bl.

State	Ravision	Date	Name	(Orig.)	(First Version:)